HYUNDAI
POWER PRODUCTS

20V 6” CORDLESS CHAIN SAW
HY20CCS150

Instruction Manual

Scan for website & alternative languages

GENUINE PRODUCT OF
HYUNDAI CORPORATION

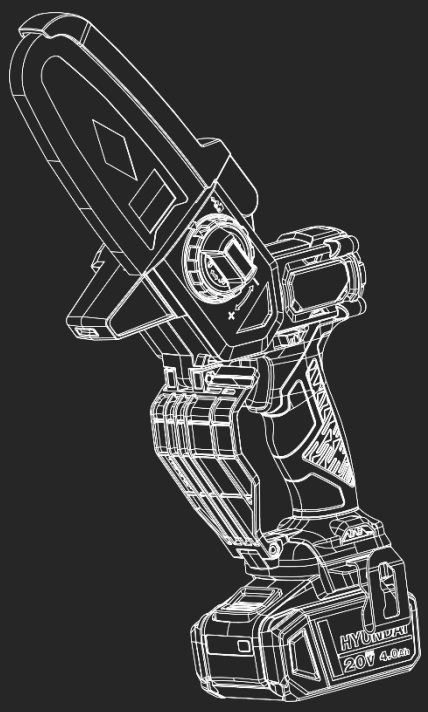

WARNING: Read the instructions carefully before use.

Iss:Jul/26

Contents

Introduction……3

Safety Information…….4-13
Understand Your Machine……..4
Personal Safety……4-5
Inspect Your Machine……5
Work Area……6
During Use……7
Batteries……8
Charger……8
Electricity……8-9
Double Insulated Devices……9
Vibrations……10
Noise……10
Residual Risks……10
Intended Use……11
Personal Protective Equipment……12
Symbols On The Machine……13

Unboxing……14

Features……15

Assembly……16-17
Chain and Bar Assembly……16
Insert Battery……17

Operation……18-22
Battery Charger Operation……18
Oiling and Priming the Chain……19
Starting and Stopping……19
Basic Chainsaw Procedure……20-21
Limbing and Pruning……22
Cutting Spring Poles……22

Maintenance & Care……23-24
General Maintenance……23
Chain Maintenance……24

Technical Data……25

Recycling And Disposal……26

Declaration Of Conformity……27

Useful Information……28
Our YouTube Channel……28
Warranty……28
Manual Updates……28
Returning Your Product……28
Leaving A Review……28
Ordering Spare Parts……28

Product Record……29

Notes……30

Contact Us……31

Introduction

Thank You For Purchasing Your HYUNDAI Product

We work very hard to give all of our customers the best possible service. If you have any problems, before leaving negative feedback, please contact us to give us a chance to resolve the issue. We would be delighted if you left us positive feedback! Thank you for purchasing this product.

⚠ Important!

WARNING: READ THE INSTRUCTION BOOKLET THOROUGHLY BEFORE USING THE MACHINE. Keep for future reference and pass it on if the machine is loaned or sold to another user.

This manual has been produced by Hyundai Power Products and should be kept with the product. Please read and understand these instructions before you use your product. Failure to do this may result in personal injury or damage to the product.

The safety precautions and warnings are to ensure your safety and protect you from harm or damage to the product.

The information contained in this manual was accurate at the time of production, however HYUNDAI Power Products may make modifications to the product without notification.

Safety Information

⚠ Understand Your Machine

• WARNING! You must read these instructions carefully before operating the machine. Make sure that you are familiar with the controls and properly operate the machine. You must learn how to stop the machine quickly. If you do not follow the warnings and instructions, it may result in fire and/or serious injury. Make sure to save all warnings and instructions for future reference.
• Read this manual and labels affixed to the machine to understand its limitations and potential hazards.
• Be thoroughly familiar with the controls and their proper operation. Know how to stop the machine and disengage the controls quickly.
• If the unit is to be used by someone other than original purchaser, or is to be loaned, rented, or sold, always provide this manual and any needed safety training before operation. The user can prevent and is responsible for accidents or injuries that may occur to themselves, to other people, or to property.
• Do not force the machine beyond its limits. Use the correct machine for your application.
• Know how to stop the machine quickly in case of emergency. Understand the use of all controls.
• ALL MAINTENANCE other than that listed in this manual, should be carried out by professionally trained and certified personnel.
• When using this machine for the first time and before actual work, you MUST learn how to handle the machine from an experienced or skilled person.

⚠ Personal Safety

• WARNING! Never allow children or people unfamiliar with these instructions to use the product. Local regulations can restrict the minimum age of the operator.
• Keep children, pets, and other people not using the unit away from the work area (at least 15m). Be alert and shut off the unit if anyone enters work area. Keep children under the watchful care of a responsible adult.
• Stay alert, watch what you are doing and use common sense when operating the machine. Never operate the machine when unwell or tired, or if you have taken alcohol, medicine, drugs or any substances which may slow your reflexes and compromise judgment. A moment of inattention while operating the machine may result in serious personal injury.
• Appropriate Personal Protective Equipment (PPE), MUST be worn at all times when operating or repairing the machine. Always wear anti-slip and resistant work footwear and long trousers while using the machine. Do not use the machine when barefoot, wearing sandals or similar lightweight footwear. Do not wear chains, bracelets or clothing that is loose fitting or hanging ties or cords. Tie long hair back. Always wear protective earplugs. Loose clothes, jewellery, or long hair can be caught in moving parts. Protect eyes, face, and head from objects that may be thrown from the unit. Always wear safety goggles or safety glasses with side shields when operating.
•Always keep hands and feet away from all moving parts during operation. Moving parts can cut or crush body parts. Always keep hands and feet away from all pinch points.

⚠ Personal Safety (Continued)

• Do not touch parts that might be hot from operation. Allow parts to cool before attempting to maintain, adjust, or service.
• Do not overreach. Keep proper footing and balance at all times. This enables better control of the machine in unexpected situations. Extending your body too far can result in a loss of balance and you may fall which will result in injury.
• Never place any part of your body where it would be in danger if movement should occur during assembly, installation, and operation, maintenance, repairing or moving.
• Keep in mind that the operator or user is responsible for accidents, hazards or unexpected events involving the machine that occur to other people or their property. It is the responsibility of the user to assess the potential risk of the area where work is being carried out. The operator or user must take all necessary precautions to ensure their own safety and that of others, especially on slopes or rough, slippery and unstable ground.

⚠ Inspect Your Machine

• Check your machine before starting it. Keep guards in place and in working order. Make sure all nuts, bolts, etc., are securely tightened.
• You must check the general condition of the machine before use.
• Never operate the machine when it is in need of repair or is in poor mechanical condition. Replace damaged, missing, or failed parts before using it. Check for fuel leaks. Keep the machine in safe working condition.
• Do not use the machine if the machine's switch does not turn off the machine when running. Any machine that can't be controlled with the switch is dangerous and must be replaced.
• Regularly check to see that keys and adjusting wrenches are removed from the machine area before starting it. A wrench or a key that is left attached to a rotating part of the machine may result in personal injury.
• If the machine should start to vibrate abnormally, stop the machine and check immediately for the cause. Vibration is generally a warning sign of trouble.
• Avoid accidental starting. Be sure the switch is off before transporting the machine or performing any maintenance or service on the unit. Transporting or performing maintenance or service on a machine with its switch on invites accidents.
• Do not tamper with or disable safety systems.
• Only use manufacturer-recommended attachments.
• Before using, always visually inspect to see that the tools are not worn out or damaged. Replace worn out or damaged elements and bolts in set to preserve balance.
• Keep the machine in good operating condition. Operating the machine in poor or questionable condition could result in serious injury.
• Be sure all safety devices are in working order and warning labels are in place. These items are installed for your safety.

⚠ Work Area

• You must only work in daylight or with good artificial light in good visibility conditions. Do not work at night, at times of heavy fog, or at any other times when your field of vision might be limited and it would be difficult to gain a clear view of the area.
• Keep people, children and animals away from the working area.
• Operate on flat, level ground.
• Do not work in the rain, when there is a thunderstorm or lightning risk, at times of strong or gale force winds, or at any other times when the weather conditions might make it unsafe to use this product. If there is bad weather conditions, do not use the machine.
• Any liquid spilled on the floor may result in you slipping.
• DO NOT operate power tools in explosive atmospheres, such as in the presence of flammable liquids, gases or dust. Power tools may create sparks, which may ignite the dust or fumes.

⚠ During Use

• Do not operate the machine in confined areas where there may be a risk of crushing due to falling debris.
• Never attempt to make any adjustments, while the machine is running.
• You must switch off the machine:
  - Before checking or working on the machine.
  - When transporting the machine.
  - Whenever you leave the machine unattended.
  - If the machine starts to vibrate abnormally.
• WARNING! If something breaks or an accident happens whilst working, you must turn off the machine immediately and move the machine away to prevent further damage. If an accident happens with injuries or third parties are injured, carry out the first aid measures most suitable for the situation immediately and contact the medical authorities for any necessary health care. Carefully remove any debris that might cause damage or harm persons or animals should it not be seen.
• Never operate the machine without the defective guards or shields, or without safety devices, or if the cord is damaged or worn.
• Always make sure that the power cord is not in the way of your work.

Safety Information

⚠ Batteries

Batteries present a risk if they become damaged by the possible leaking of electrolyte. Electrolyte is an acid and can cause serious burn injuries. Care should be taken when working on or near them. **NOTE:** the electrolyte may be in a liquid or gel form.

Should you come in to contact with electrolyte you should;

• Remove all clothing contaminated with electrolyte. If you cannot remove then saturate them in water.

• Get medical assistance as soon as possible.

You must advise the medical staff of the type of acid.

• Lead/acid battery = dilute sulphuric acid.

• Nickel/cadmium = potassium hydroxide alkali electrolyte.

• Use fresh running water to wash off excess electrolyte, continue this until medical assistance arrives. Make sure don't transfer electrolyte to other body parts.

• If electrolyte comes in to contact with Eyes the electrolyte needs to be immediately washed away with large amounts of water. Make sure that you do not wash the electrolyte to another part of your face or body.

• Gasses from charging batteries are highly flammable and great care should be taken to charge in well ventilated areas.

• There is an explosion risk if the battery terminals are short circuited, when connecting/disconnecting ALWAYS exercise great care so that the terminals or battery leads are NOT allowed to touch and cause a spark. ALWAYS use suitable insulated tools.

⚠ Battery Charger

• Do not place any objects on the battery charger and do not place the battery charger on soft surfaces. There is a risk of explosion.

• If other batteries are used, e.g. imitations, reconditioned batteries or third-party products, there's risk of injury as well as damage caused by explosion

• A charger that is suitable for one type of battery pack may create a risk of fire when used with another battery pack. This may cause an internal short-circuit and the battery to burn, smoke, explode or overheat.

⚠ Electricity (Where Applicable)

DANGER : ELECTRICITY CAN KILL – NEVER WORK ON LIVE / ENERGISED EQUIPMENT.

• Prior to carrying out any maintenance work you MUST identify electrical isolation methods and isolate all electrical supplies.

• Prior to use and with all electrical supplies isolated, you MUST check all electrical cables, plugs and connectors for the following;

- Are intact and have no signs of damage, to include but not limited to bare wires, chaffing, cuts and loose wiring.
- If there are any signs of damage, the damaged item MUST be taken out of service until the damage has been repaired by an electrically competent person.
- All trailing cables should be routed so as not to cause any kind of trip hazard.
- NEVER work on or near electricity with wet hands, wet clothing and wet gloves.

⚠ Electricity (Continued)

• Power tools plug must match the outlet. Never modify the plug in any way. DO NOT use any adapter plugs with earthed (grounded) power tools. Unmodified plugs and matching outlets will reduce risk of electric shock.
• DO NOT expose this power tool to rain or wet conditions. Water entering a power tool will increase the risk of electric shock. DO NOT abuse the power cord. Never use the cord for carrying, pulling or unplugging the power tool. Keep the cord away from heat, oil and sharp edges or moving parts. Damaged or entangled cords increase the risk of electric shock. When operating a power tool, use an extension cord suitable for outdoor use. Use of a cord suitable for outdoor use reduces the risk of electric shock.
• **IMPORTANT:** Make sure that the electric circuit is fused, and that the power, voltage and frequency of the motor is supported by your mains supply. Also, make sure that your power supply is earthed. Connect your machine to earth. Never open the ON/OFF switchbox. However, if it should become necessary to do so, contact a qualified electrician. Make sure that you will never touch live contacts, specifically when you plug or unplug your machine. This machine and its power cord must never get into contact with water.
• Avoid body contact with earthed or grounded surfaces such as pipes, radiators, ranges and refrigerators. There is an increased risk of electric shock if your body is earthed or grounded.
• To prevent electric shock, use only with an extension cord suitable for outdoor use. For additional protection, the installation of a residual current device (RCD) having a rated residual operating current not exceeding 30mA is advisable.
• Before use, check that the extension cord is in good condition. When using an extension cord, make sure to use one heavy enough to carry the current your product will draw. An undersized cord will cause a drop in line voltage resulting in loss of power and overheating.
• Do not allow any part of the machine to make contact with water while it is in operation. If the appliance becomes wet while turned off, wipe dry before starting. Do not touch the appliance or its plug with wet hands or while standing in water. Wearing rubber boots offers some protection.
• Before use, check the supply and extension cord for signs of damage or aging. If the cord becomes damaged during use, disconnect the cord from the supply immediately. If the supply cord is damaged, it must be replaced by the manufacturer or a qualified person in order to avoid a hazard.

⚠ Double-Insulated Appliances

In a double-insulated appliance, two systems of insulation are provided instead of grounding. No grounding means that it is already provided on a double-insulated appliance. Servicing a double-insulated appliance requires extreme care and knowledge of the system, and should be performed only by qualified service personnel. Replacement parts for a double-insulated appliance must be identical to the parts they replace.

⚠ Vibrations (Where Applicable)

• Prolonged use of hand held (operated) machines will cause the user to feel the effects of/from vibrations. These vibrations can lead to white finger (Raynaud's phenomenon) or carpal tunnel syndrome. This condition reduces the ability of the hand to feel and regulate temperature, causing numbness and heat sensations and may cause nerve damage and circulatory tissue death.
• Not all factors that lead to white finger disease are known, but cold weather, smoking and other diseases that affect blood vessels and blood circulation as well as large and long-lasting impact of shocks are considered factors in the formation of white finger. Note the following to reduce the risk of white finger and carpal tunnel syndrome;
• Wear gloves and keep your hands warm.
• Take regular breaks.
• All of the above precautions may help reduce the risk of white finger disease but not rule out the carpal tunnel syndrome. Long-term and regular users are therefore recommended to observe the condition of your hands and fingers. Seek medical attention immediately if any of the above symptoms should occur.

⚠ Noise (Where Applicable)

• The operating noise of the machine can damage your hearing. When wearing protection such as earplugs or ear defenders to protect your hearing. Long-term and regular users are advised to have hearing checked regularly. Be especially vigilant and cautious when wearing ear protection because your ability to hear alarm warnings will be reduced.
• Noise emissions for this equipment is unavoidable. Carry out noisy work at approved times and for certain periods. Limit the working time to a minimum. For your personal protection and protection of people working nearby it is also advisable for them to wear hearing protection.

• See Certificate of Conformity section for Outdoor Noise declaration of conformity.

⚠ Residual Risks

Even when tool is used as prescribed it is not possible to eliminate all residual risk factors. The following hazards may arise in connection with the tool's construction and design:

1. Damage to lungs if an effective dust mask is not worn.
2. Damage to hearing if effective hearing protection is not worn.

Health defects resulting from vibration emission if the power tool is being used over longer period of time or not adequately managed and properly maintained.

⚠ **WARNING!** This machine produces an electromagnetic field during operation. This field may under some circumstances interfere with active or passive medical implants. To reduce the risk of serious or fatal injury, we recommend persons with medical implants to consult their physician and the medical implant manufacturer before operating this machine.

Intended Use

The HYCCS150 is a 20V Cordless Chain Saw. It is powered by a Brushless HYUNDAI motor.

This machine is specifically a pedestrian tool, manufactured according to the latest safety requirements. Every precaution is only effective when it's followed exactly.

Intended Use
This machine is designed and manufactured cutting braches and thick shrubbery.

This machine is intended for use in environments with a maximum ambient temperature of 32°C.

User Types
This machine is intended for use by consumers, i.e. non professional operators. The machine is intended for "DIY" and domestic use only.

Improper Use
Any other usage not in keeping with the above mentioned ones may be hazardous and harm persons and/or damage things. Examples of improper use may include, but are not limited to:

- Using to cut any non-garden materials
- Cutting masonry or construction materials, I.e stones and cement
- Use within a household environment

Personal Protective Equipment

Appropriate Personal Protective Equipment (PPE), MUST be worn at all times when operating or repairing the machine. No protective equipment can ensure 100% protection.
When selecting PPE, make sure it's CE marked and it suits the user in terms of size, fit, etc. If more than one item of PPE is worn at the same time, make sure they can be used together, e.g. wearing safety glasses may disturb the seal of a respirator, causing air leaks.

Hand Protection Must Be Worn
Protective electrically non-conductive gloves are highly recommended when working.

Foot Protection Must Be Worn
Non-skid heavy duty footwear are highly recommended when working.

Hearing Protection Must Be Worn
Suitable safety hearing protection is recommended.

Eye Protection Must Be Worn
Always wear safety glasses/goggles and/or face shields. Everyday eyeglasses have only impact resistant lenses; they are not safety glasses/goggles.

Protective Clothing Must Be Worn
Do not wear loose clothing, gloves, scarfs, neckties or jewellery (rings, wrist watches), which can be caught in moving parts.

Head Protection Must Be Worn
Wear a safety helmet with a safety visor.

Face Shield Must Be Worn
Wear a face shield to protect your face.

Safety Information

⚠ Symbols On The Machine

We have provided safety messages in this manual and on the machine. This information alerts you to potential hazards that could hurt you or others. Please read these messages carefully. However, we may not have listed all of the possible hazards, you must also use your own judgement.

Symbol	Description	Symbol	Description
	Safety alert – Indicates a precaution, a warning or a danger.		Dust mask must be worn
	Read operator's manual.		Class II tools symbol.
	Hand protection must be worn		Hearing protection must be worn
	Sharp blades can cut limbs.		Eye protection must be worn
CE	This product complies with the European directives and an evaluation method of conformity for these directives was done.	UK CA	The UKCA (UK Conformity Assessed) marking is a UK product marking that is required for goods being placed on the market in Great Britain (England, Wales and Scotland).
	This product should not be disposed of in domestic waste. Please contact your local recycling centre for disposal service.	LWA dB	Sound power level LWA data in dB.

Unboxing

⚠ **WARNING :** Unboxing and assembling the machine should be done on a flat, surface with enough room. Disposal of the packaging should be done in accordance with the local regulations in force.

⚠ **WARNING :** Some of the packaging material may be harmful to children. Keep out of reach of children.

1. Carefully remove the product from the packaging and examine it for any sign of damage caused during shipping.
2. Lay the contents out and check them. If any part is damaged or missing, you must not use the machine. Contact HYUNDAI POWER PRODUCTS immediately.
3. You must keep the packaging material in case the machine needs to be returned or repaired.
4. Ensure that you have all the accessories and tools you need for assembly and operation including the suitable personal protective equipment.

We recommend that you fill out the information in the 'Product Record' section. If you need to contact an authorised dealer or customer service, you may need to provide this information.

Features

***Not To Scale**

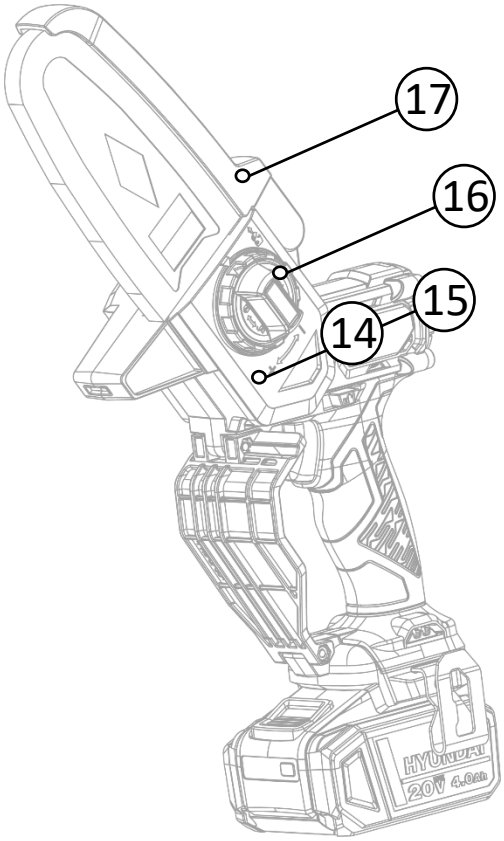

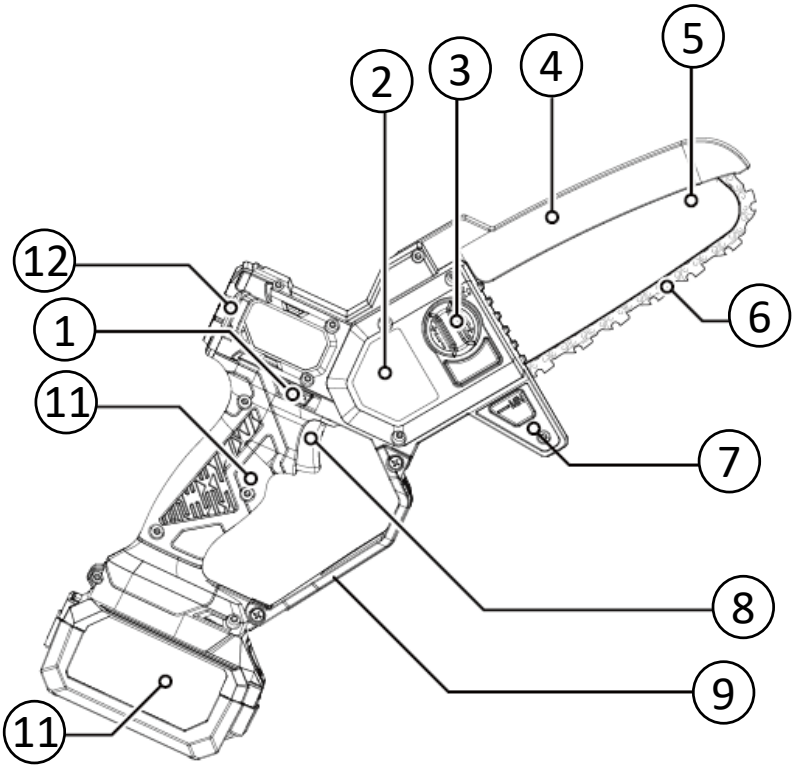

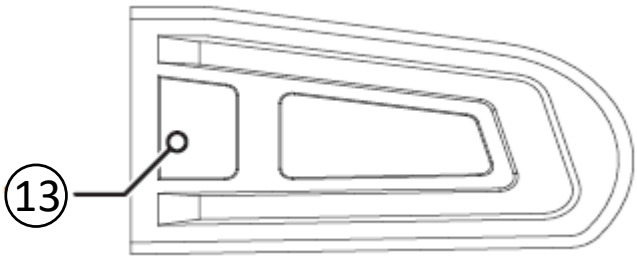

1. Safety Lock off Switch
2. Sprocket Cover
3. Oil Reservoir Cap
4. Riving Knife
5. Chain Bar
6. Chain
7. Oil Reservoir & Oil Level Indicator
8. On/Off Trigger
9. Hand Guard
10. Battery
11. Air Vents
12. Hand Grip
13. Guide Bar Cover
14. Sprocket (Under Sprocket Cover)
15. Chain Adjustment Pin (Under Sprocket cover)
16. Chain Tensioner
17. Upper Chain Guard/Oil Release Bar

Chain and Bar Assembly

⚠ Ensure the Battery is Disconnected throughout Chainbar assembly

1. Unscrew the Chain Tensioner (3) counter-clockwise in order to remove the sprocket cover (2).

2. Remove the guide bar from the machine and run the saw chain around it. Please note the running direction of the saw chain. The saw chain icon is shown on the cover.

3. Run the saw chain over the sprocket (14) and replace the guide bar on the chain adjusting pin (15).

4. Use an oiler to oil the saw chain and the sprocket.

5. Place the Sprocket Cover (12) back onto the main body, ensuring the sprocket is placed in the corresponding location in the Sprocket Cover. Turn the Chain Tensioner (3) until all slack is taken out.

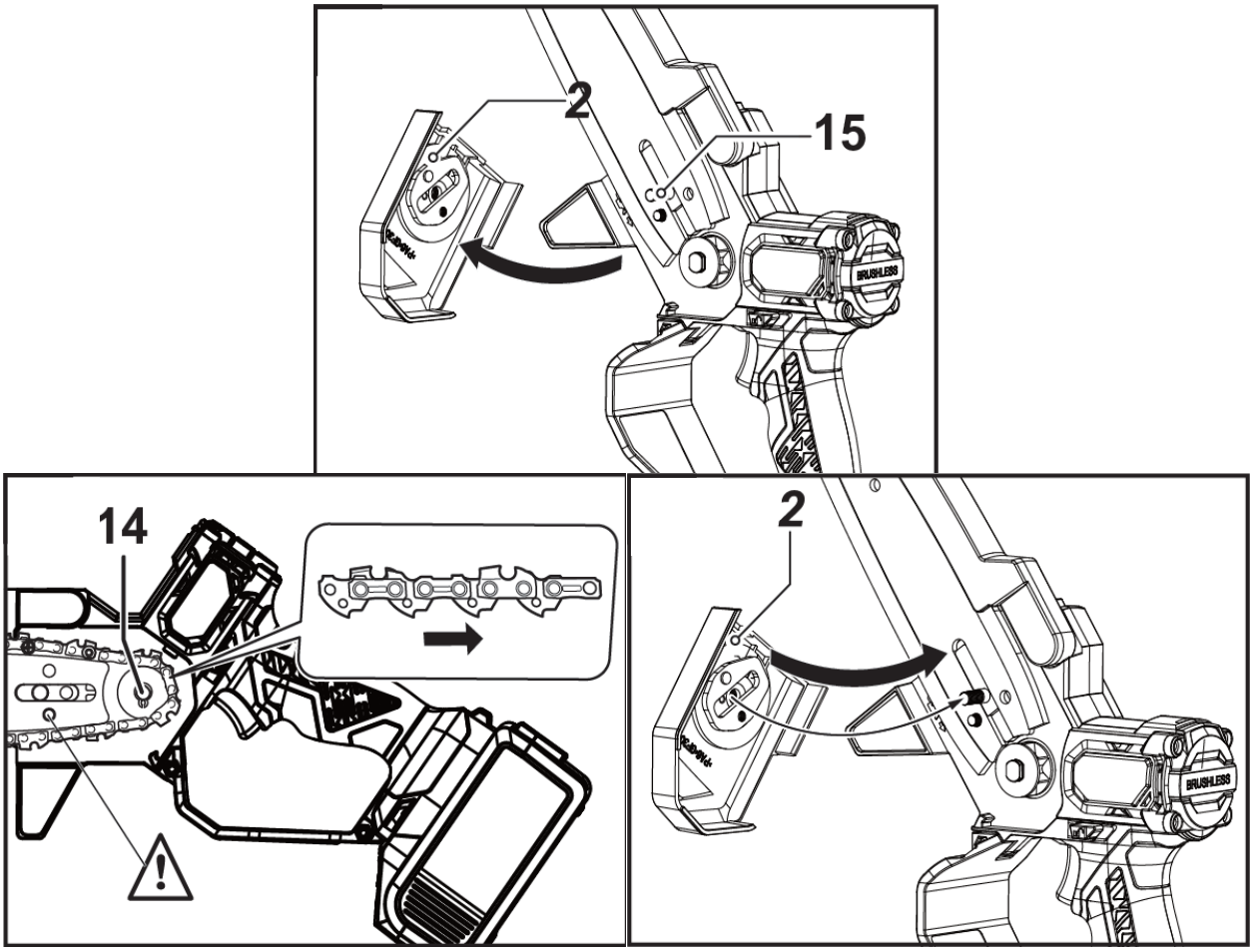

Assembly

Insert Battery

⚠ Ensure battery is fully charged before assembly

Insert the Battery into the Battery Carriage, with the Battery Release button facing away from the carriage. Gently pull the battery away from the carriage to test if it's correctly positioned.

Operation

Battery Charger Operation

1. Charge the battery pack
Do not use any charger other than that specifically provided for use with the equipment.
If the battery pack is very hot you must remove your battery pack from the charger and allow time for the battery to cool down before recharging.
Please charge the battery to reach full before storage. If the tool will not be used for long periods of time, charge the battery every 3 months.
2. To remove or install the battery pack
Depress the battery pack release button **(C)** firmly first and then slide the battery pack **(D)** out from your tool. After recharge, slide the battery pack back into tool's battery port. A simple push and light pressure will be sufficient.

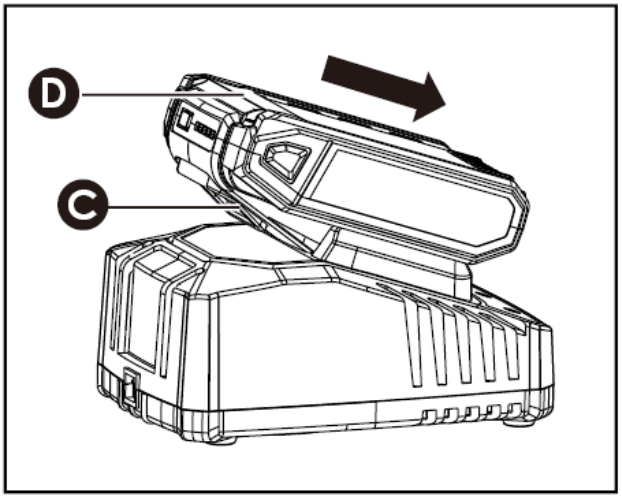

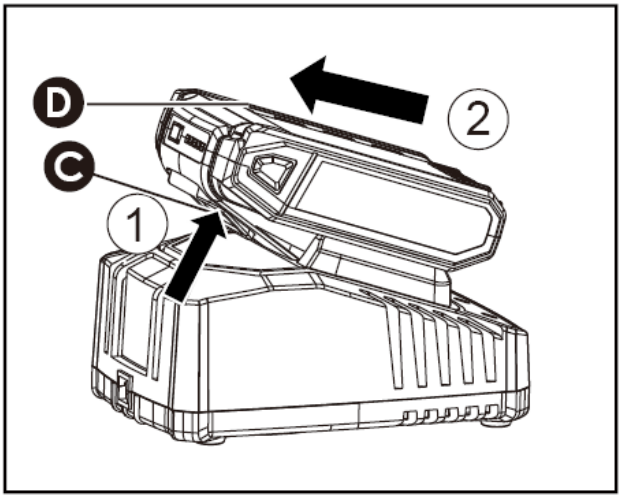

⚠ WARNING: When battery charge runs out after continuously use or exposure to direct sunlight or heat, allow time for the tool to cool down before re-charging to achieve the full charge.

3. Charging procedure

1) Plug the charger into an appropriate outlet. The green light will illuminate.
2) Slide the battery pack into the charger, make sure the battery is in the correct charge position firmly. The green light will be off and red light will illuminate to indicate the charging process has started.
3) When charging is completed, the red light turn off and green light will illuminate.
4) After fully charged, unplug the charger and remove the battery pack.

NOTE: If the battery pack is locked in the charger, press the battery pack release button and remove it.

5. To remove or install the battery pack into the tool

Depress the battery pack release button **(C)** firmly first and then slide the battery pack out from your tool. Slide the fully charged battery pack **(D)** onto the tool with sufficient force until it clicks into position.

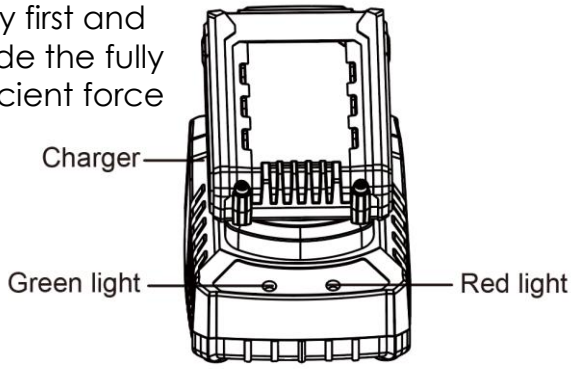

Battery Charger Indicators

This charger is designed to detect some problems that can arise with battery packs. Indicator lights indicate problems (see table below). If this occurs, insert a new battery pack to determine if the charger is ok. If the new battery charges correctly, then the original pack is defective and should be returned to a service center or recycling service center. If the new battery pack displays the same problem as the original battery pack, have the charger tested at an authorized service center.

Light	ON/OFF Flash	Status
Red On	———————	Charging
Red Flash	- - - - - - -	Defective Battery
Green On	———————	Fully Charged
Green Flash	- - - - - - -	Battery Too Hot/Cold

Oiling and Priming the Chain

⚠ Warning! NEVER try to prime the chain whilst the machine is turned on. Only ever operate the Upper Chain Guard by hand with the machine OFF, and the chain stationary.

- Remove the Oil Reservoir Cap (A). Fill Reservoir with chainsaw oil, using the Oil level indicator (C) as a reference.
- To Prime the chain, elevate the Upper Chain Guard/Oil Release (B) a few times before operation.

Starting and Stopping

⚠ Warning! You MUST read and fully understand the whole user manual before operation

CAUTION - The chain of this machine is sharp, and correct PPE must be worn with ALL machine operation.

Before Operating, ensure you oil the chain with chainsaw specific oil.

1. Turn the Machine on, on the back of the machine, press and/or hold the power switch until switched on. The machine is now ready to use.
2. The **Power Safety Switch (3)** must also be pressed before operating the machine.
3. Whilst pressing the **Power Safety Switch (3)**, at the same time pull the **On/Off Trigger (8)**, allowing the machine 1-2 seconds, the machine will start. When started, the **Power Safety Switch (3)** can be released.
4. To Stop the machine, simply release the **On/Off Switch.**

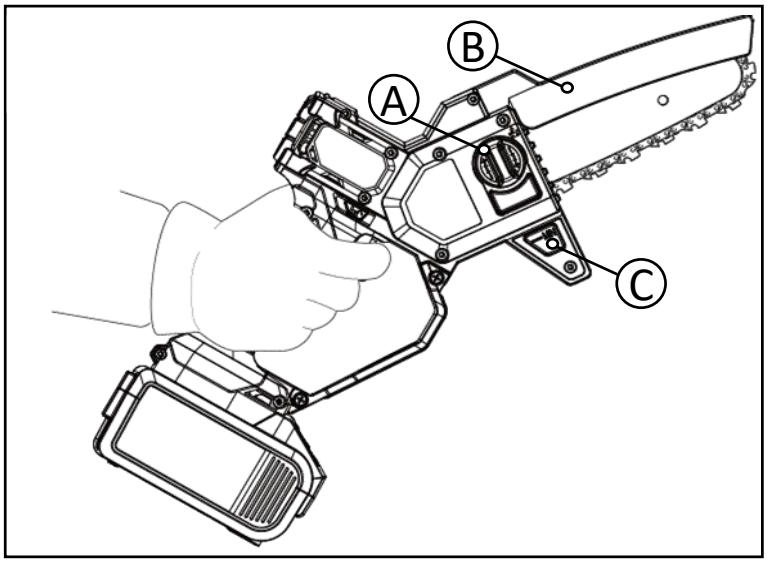

Basic Chainsaw Procedure

WARNING! Chainsaws by their very nature are extremely dangerous machines and should be handled with respect!

We strongly recommend that before use of this product, you attend a chainsaw training course to familiarise yourself with the maintenance and usage of these products! Thoroughly read this manual and adhere to all safety instructions at all times. The manufacturer will not be held liable for any accidents/injuries caused due to misuse or incorrect maintenance of this product!

1. To become proficient, attend a recognised chainsaw training course to learn how to operate chainsaws safely and effectively. Familiarise yourself with all the controls and switches. Practice all movements with the product switched off.

2. Always hold the product firmly; with your other hand, you can hold the branch/work piece to assist with falling debris.

3. Only use the product with a secure stance. Hold the product at the right-hand side of your body.

4. Check the lubrication. Start the machine and check whether the chain can give off a spray of oil within a few seconds. If an oil trace can be seen, the chainsaw is lubricating.

Basic Chainsaw Procedure (Continued)

5. Ensure the saw chain is running at full speed before it makes contact with the wood.

6. Do not force the saw chain while cutting, let the chain do the work using the gripping teeth to apply minimal leverage pressure.

7. Do not operate the product with arms fully extended or attempt to saw areas which are difficult to reach, or on a ladder. Never use the product above shoulder height (See below).

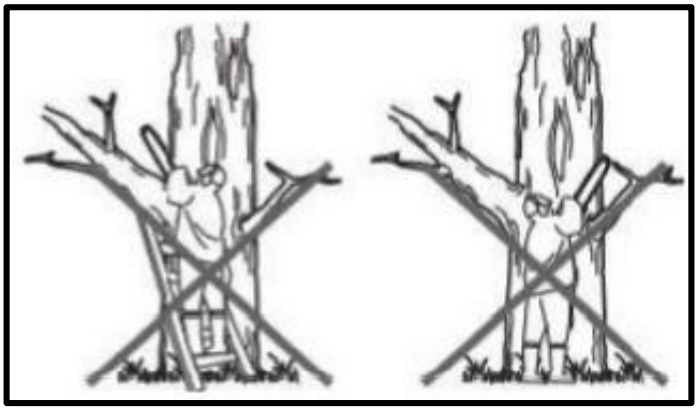

Limbing and Pruning

WARNING! Never climb into a tree to limb or prune! Do not stand on ladders, platforms, logs, or in any position which may cause you to lose the balance or control of the saw! When pruning trees, it is important not to make the flush cut next to main limp or trunk until you have cut off the limb further out to reduce the weight! This prevents stripping the bark from the main member!

WARNING! If the branches to be pruned are above chest height, hire a professional to perform the pruning

Limbing is removing the branches from a fallen tree. When limbing leave larger lower limbs to support the log off the ground. Remove the small limbs in one cut (see below). Branches under tension should be cut from the bottom up to avoid binding the product.

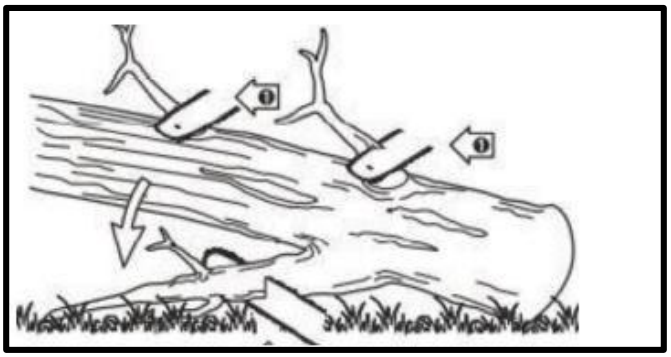

Cutting Spring Poles

1. A spring pole is any log, branch, rooted stump, or sapling which is bent under tension by other wood, so that it springs back if the wood holding it is cut or removed (see figure below).

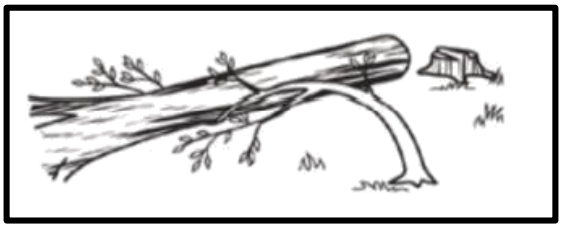

2. On a fallen tree, a rooted stump has a high potential of springing back to the upright position during the bucking cut to separate the log from the stump.

3. Watch out for spring poles, they are dangerous.

Maintenance & Care

General Maintenance

⚠ WARNING : Turn OFF the machine, allow all moving parts to come to a complete stop, and disconnect the power cord before maintaining the machine. You need to wear proper clothing and protective gloves whenever your hands are at risk.

- Keep all nuts, bolts and screws tight to be sure the machine is in a safe working condition.
- Replace worn or damaged parts for safety. Only use manufacturer-recommended parts and accessories.

Storage

⚠ Keep the machine stored in a dry, level area away from damp, moisture and rain fall. Allow the machine to cool down before storing.

- Make sure the machine is clean and dry before storing.
- Ensure the machine is stored in a position, where any persons cannot step on, to attempt to reach items up high, due to risk of movement.
- DO NOT store the machine near an ignition source, such as a wood stove, gas or electric heater, or an appliance or heater with a pilot light.
- Store the machine out of reach of children or anyone who is not familiar with operation.
- DO NOT stack other items on top of the machine when in storage.
- Make sure the machine is stored away from direct sunlight. Store indoors or in a safe, frost-free area during severe weather and winter months.

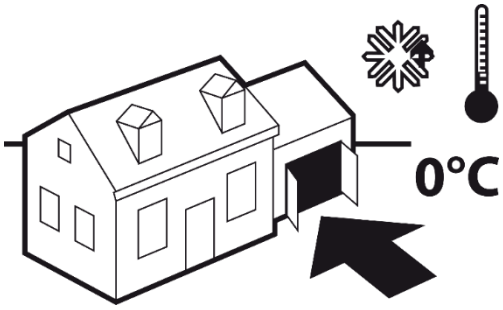

Chain Maintenance

The saw teeth must be sharpened if the sawdust becomes powdery, if additional force is required for the incision, if a straight incision is no longer possible or if the vibrations become stronger. Blunt saw chains should be re-sharpened. To sharpen the chain use a chain sharpener, make sure you sharpen the chain at a 30 ° angle. Or have the chain re-sharpened professionally (advised). Replace the saw chain if there is considerable damage that cannot be repaired by filing.

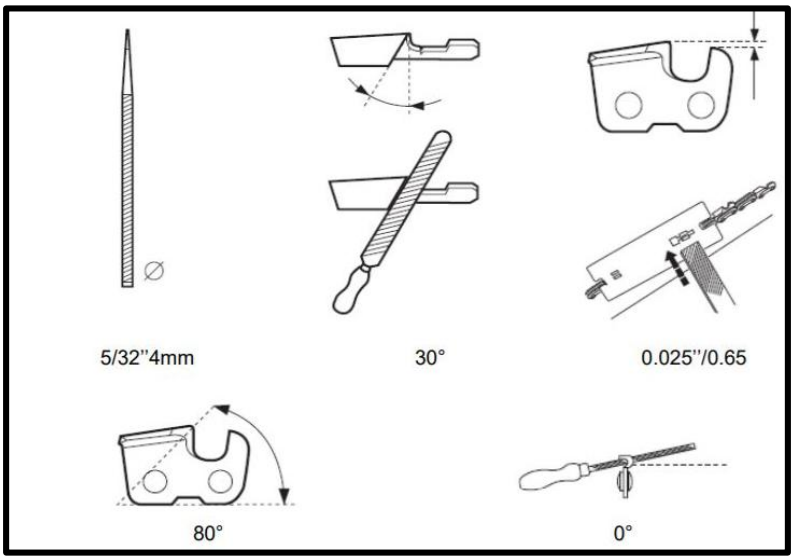

Thoroughly clean the notch of the guide bar. Replace the guide bar if the guide groove is damaged or worn and the saw chain has too much lateral space.

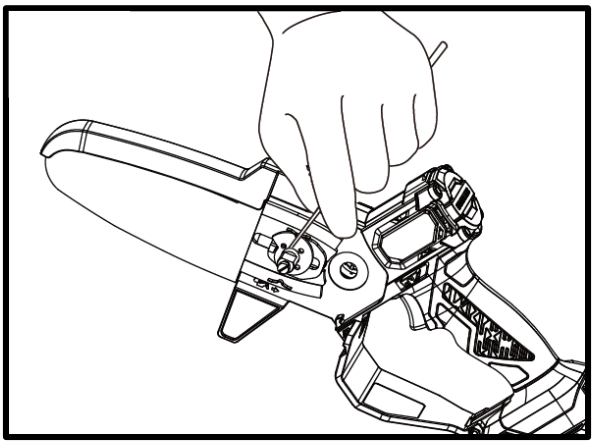

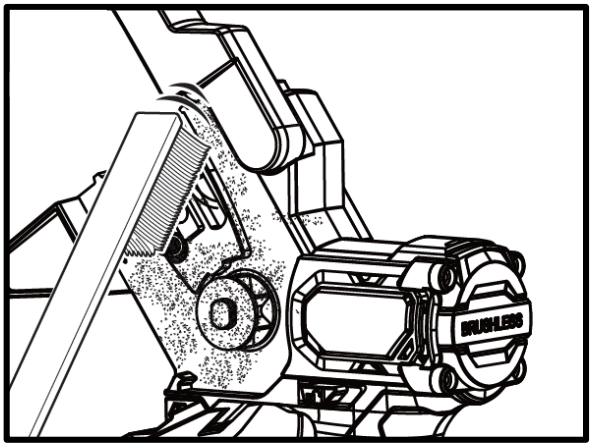

Technical Data

Machine Specification

Model	**HY20CCS150**
Motor Type	Brushless
Bar & Chain	6 Inch Bar & Chain
Chain Speed	7.4 m/s
Rated Speed	5000 rpm
Oil Reservoir Capacity	100ml

Recycling & Disposal

We do not offer a takeback scheme for the recovery of Waste Electrical Electronic Equipment (WEEE) & Batteries. Instead the responsibility to dispose of WEEE and/or Batteries is passed onto you by us.
So when it becomes necessary to dispose of your machine you must take it to your local Civic Amenity Site. For further information please contact your local Authority for disposal advice.

You MUST make sure that all unused oil and fuel is disposed of correctly either beforehand or at your local Civic Amenity Site.

• Under NO circumstances must any fuel or oil be put down any drains.
• Certain products contain WEEE waste which should not be disposed of in your domestic waste.
• You MUST recycle WEEE in accordance with your local authority or recycling centre.
• Certain products contain batteries which should not be disposed of in your domestic waste.
• You MUST recycle batteries in accordance with your local authority or recycling centre.
• Unwanted packaging and materials should be stored and taken to a recycling centre so it can be disposed of in a manner which is compatible with the environment.

We are a Member of the VALPAK National Compliance Scheme and our registration number is RM08660. For further information about disposal please contact your Local Authority.
You can also get more advice and guidance about recycling at the following website http://www.recycle-more.co.uk
Should you pass this product on to another user either sold or loaned, you MUST pass on this user manual. This will make sure that all other users can use and maintain this machine safely.

Environmental Protection

1. Environmental protection should be a priority of considerable importance when using the machine, for the benefit of both social coexistence and the environment in which we live. Try not to cause any disturbance to the surrounding area.
2. You must comply with local regulations and provisions for the disposal of packaging, oils, fuel, filters, damaged parts or any elements which have a strong impact on the environment. This waste must not be disposed of as normal waste. It needs to be separated and taken to specified waste disposal centres where the material will be recycled.
3. You must comply with local regulations for the disposal of waste materials after mowing.
4. When disposing, do not pollute the environment with the machine, but hand it over to a disposal centre, in accordance with the local laws in force.

EU Declaration Of Conformity

Importer and Authorised Representative

Genpower Ltd
Isaac Way, Pembroke Dock, SA72 4RW

Country of Origin: China
Description: Battery Powered Lawn Mower
SKU Code: HY20CCS150
Date of Issue: 01/12/2025

This declaration is issued under the sole responsibility Genpower Ltd

We hereby declare that the machine detailed in this declaration complies to all the relevant provisions of the following EC directives and regulations.

Regulations and Directives of Compliance

- 2006/42/EC The Machinery Directive
- 2014/30/EU Annex ll Electromagnetic Compatibility Directive
- 2011/65/EU RoHS
- 2000/14/EC Noise Emissions in the Environment by Equipment for use Outdoors

Conforming to the Following Requirements and Documents

EN 60335-2-77:2010
EN 60335-1:2012+A11:2014+A13:2017+A1:2019+A2:2019+A14:2019
Delclaration for 2000/14/EC Noise Emissions in the Environment by Equipment for use Outdoors.

Statement of Declaration

We the importer and authorised representative of the product described confirm conformity within the provisions of applicable regulations and directives listed within this document.

Signed on Behalf of Genpower Ltd

Identification of Manufacturer:
Genpower Ltd, Isaac Way, Pembroke Dock, Pembrokeshire, SA72 4RW, UK.

Name and address of technical documentation holder and EU distributor:
Genpower Ltd, 131 Boulevard Pereire, 75017 Paris, France.

Place of Issue: Genpower Ltd
Signatory Name: Roland Llewellin
Position: Managing Director

R J Llewellin
.....

UK CA CE

Useful Information

Check Out Our YouTube Channel

Our videos on YouTube include:

- Unboxing
- Assembly of your machine
- How to service your machine
- Products in use
- 'How To' videos
- Product features

Go to YouTube and search **'Hyundai Power Products'.**

Warranty

Proof of purchase will be required before you make a warranty claim. Full warranty terms and conditions can be found on the HYUNDAI POWER PRODUCTS website:
www.hyundaipowerproducts.co.uk

Manual Updates

Our manuals are constantly being reviewed and updated. Should you find an error, omission or something unclear, please contact us for assistance. We reserve the right to make any modifications without prior notice whenever necessary.
Our latest manuals are also placed online. All our manuals can be downloaded at:
www.hyundaipowerproducts.co.uk

Returning Your Product

If you are returning your product, please contact the dealer for their returns policy.

Leaving A Review

We work very hard to give all of our customers the best possible service. If you have any problems, before leaving negative feedback, please contact us to give us a chance to resolve the issue. We would be delighted if you left us positive feedback! To leave a review, please go to:
uk.trustpilot.com/review/hyundaipowerequipment.co.uk

Ordering Spare Parts

You can find the spare part you are looking for at **power-spares.co.uk**

Product Record

Information

As soon as you have purchased the machine, we recommend that you fill out the following. If you need to contact an authorised dealer or customer service for information on servicing, you may need to provide the following information.

Date Of Purchase:…….....

Dealer Name:……..

Dealer Phone:…….....

Model Number:…….....

Serial/Batch Number:……..…….....

Notes

Contact Us

Need Help? Talk To Our Experts

Our friendly aftersales team will be more than happy to help you.

Phone
Call our team on 01646 687 880

Email
aftersales@hyundaipowerproducts.co.uk

Online Live Chat
Go to www.hyundaipowerproducts.co.uk

Post
Genpower Ltd, Isaac Way, Pembroke Dock, Pembrokeshire, SA72 4RW.

Hyundai Support Website
Go to hyundaisupport.co.uk

HYUNDAI
POWER PRODUCTS

GENUINE PRODUCT OF
HYUNDAI CORPORATION

For Inquiries, Please Contact:
GENPOWER LTD
Isaac Way, London Road,
Pembroke Dock, UK, SA72 4RW.
T: +44 (0) 1646 687 880
E: info@hyundaipowerproducts.co.uk
www.hyundaipowerproducts.co.uk

Imported / Distributed by Genpower Ltd for the United Kingdom & Ireland

Licensed by Hyundai Corporation Holdings, Korea